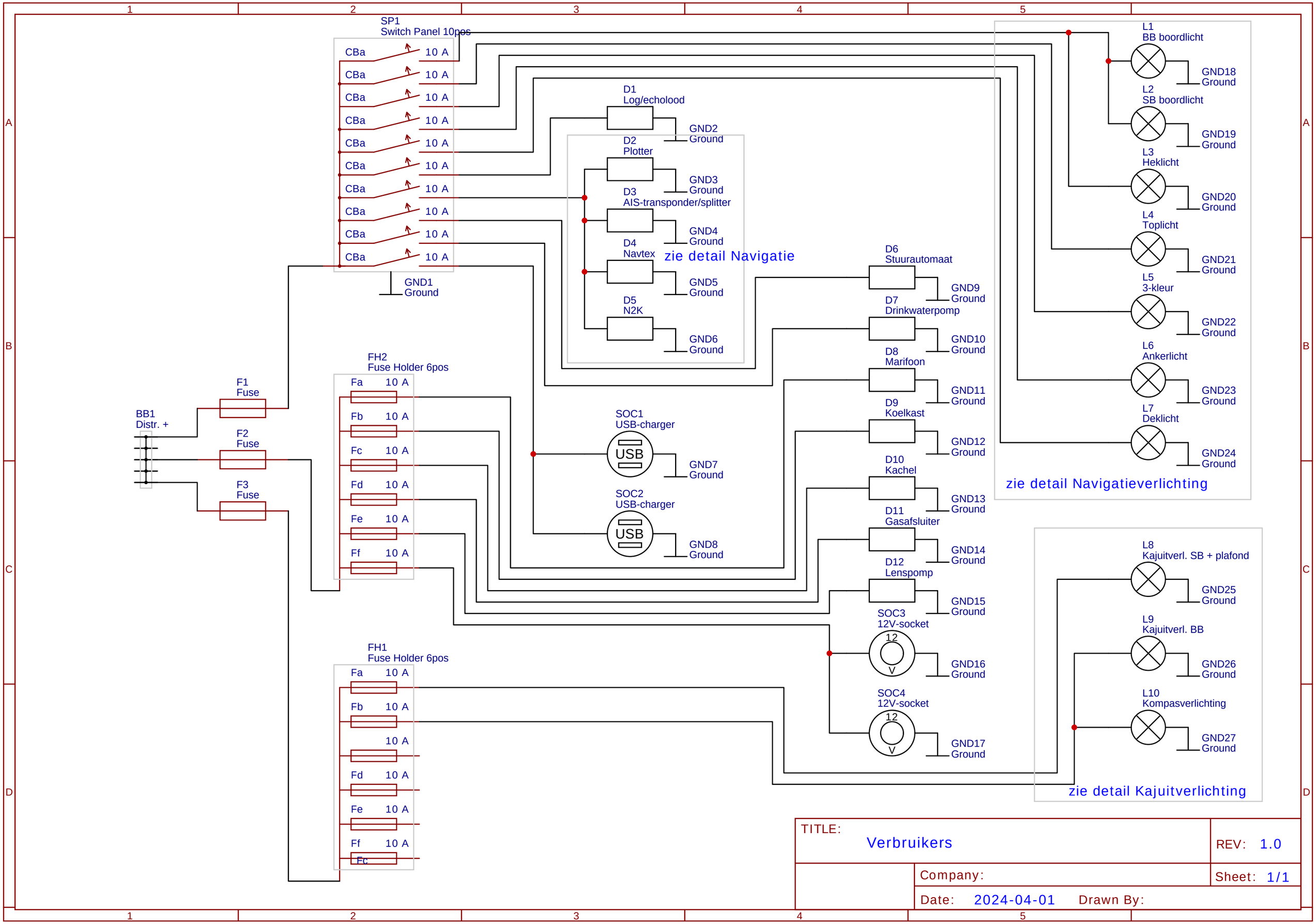
SP1
Switch Panel 10pos
CBa 10 A
GND1
Ground
D1
Log/echolood
GND2
Ground
D2
Plotter
GND3
Ground
D3
AIS-transponder/splitter
GND4
Ground
D4
Navtex
GND5
Ground
D5
N2K
GND6
Ground
zie detail Navigatie
D6
Stuurautomaat
GND9
Ground
D7
Drinkwaterpomp
GND10
Ground
D8
Marifoon
GND11
Ground
D9
Koelkast
GND12
Ground
D10
Kachel
GND13
Ground
D11
Gasafsluiter
GND14
Ground
D12
Lenspomp
GND15
Ground
SOC3
12V-socket
GND16
Ground
SOC4
12V-socket
GND17
Ground
L1
BB boordlicht
GND18
Ground
L2
SB boordlicht
GND19
Ground
L3
Heklicht
GND20
Ground
L4
Toplicht
GND21
Ground
L5
3-kleur
GND22
Ground
L6
Ankerlicht
GND23
Ground
L7
Deklicht
GND24
Ground
zie detail Navigatieverlichting
L8
Kajuitverl. SB + plafond
GND25
Ground
L9
Kajuitverl. BB
GND26
Ground
L10
Kompasverlichting
GND27
Ground
zie detail Kajuitverlichting
BB1
Distr. +
F1
Fuse
F2
Fuse
F3
Fuse
FH2
Fuse Holder 6pos
Fa 10 A
Fb 10 A
Fc 10 A
Fd 10 A
Fe 10 A
Ff 10 A
SOC1
USB-charger
GND7
Ground
SOC2
USB-charger
GND8
Ground
FH1
Fuse Holder 6pos
Fa 10 A
Fb 10 A
10 A
Fd 10 A
Fe 10 A
Ff 10 A
Fc
TITLE:
Verbruikers
REV: 1.0
Company:
Sheet: 1/1
Date: 2024-04-01
Drawn By: