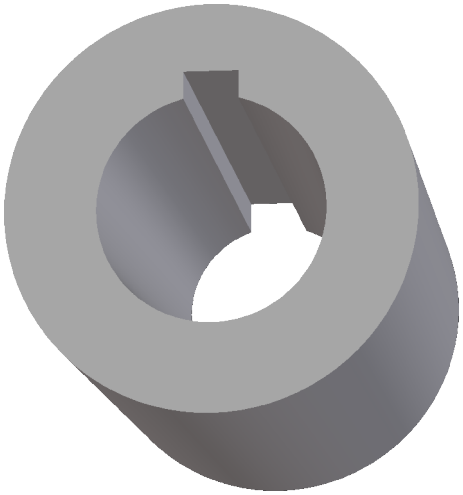

G

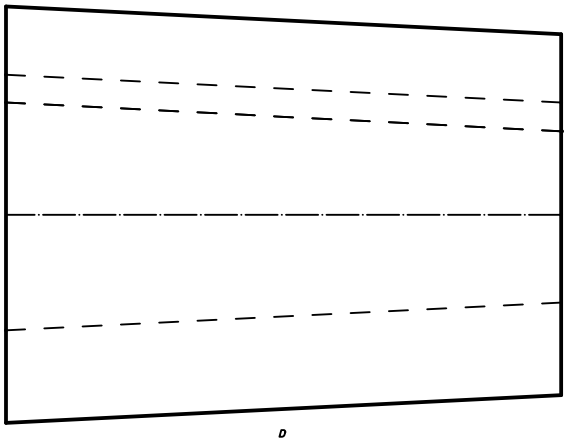

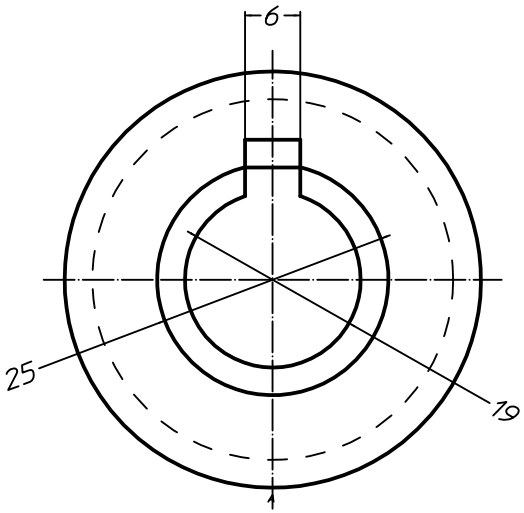

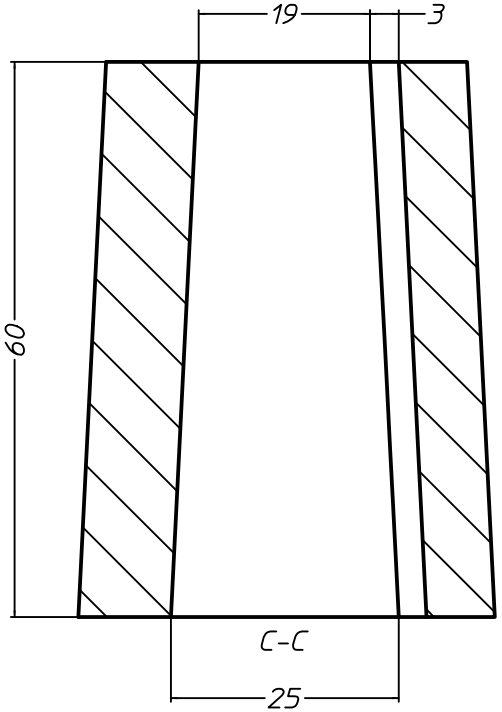

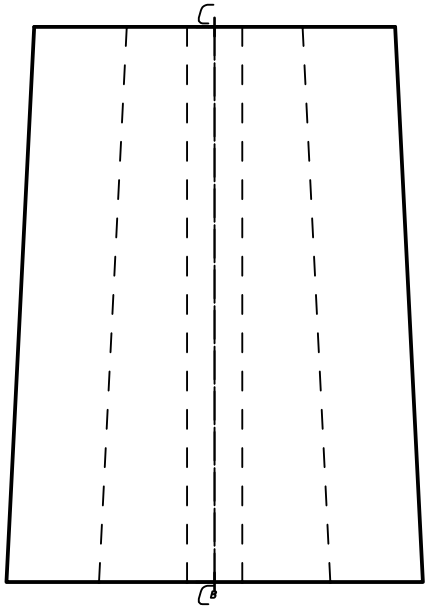

USE SAME				TOLERANCE		SURFACE	ARCHIVE		SCALE 50
							MATERIAL		
					DATE	NAME	DESCRIPTION		
				DRAWN					
				APPR.					
				N.K.					
							DRAWING-NUMBER		SHEET 1
							Schnitzer Sebastian		OF 1
MODIFICATION		DATE	NAME ORIGINAL				MENGA.		MENGA.