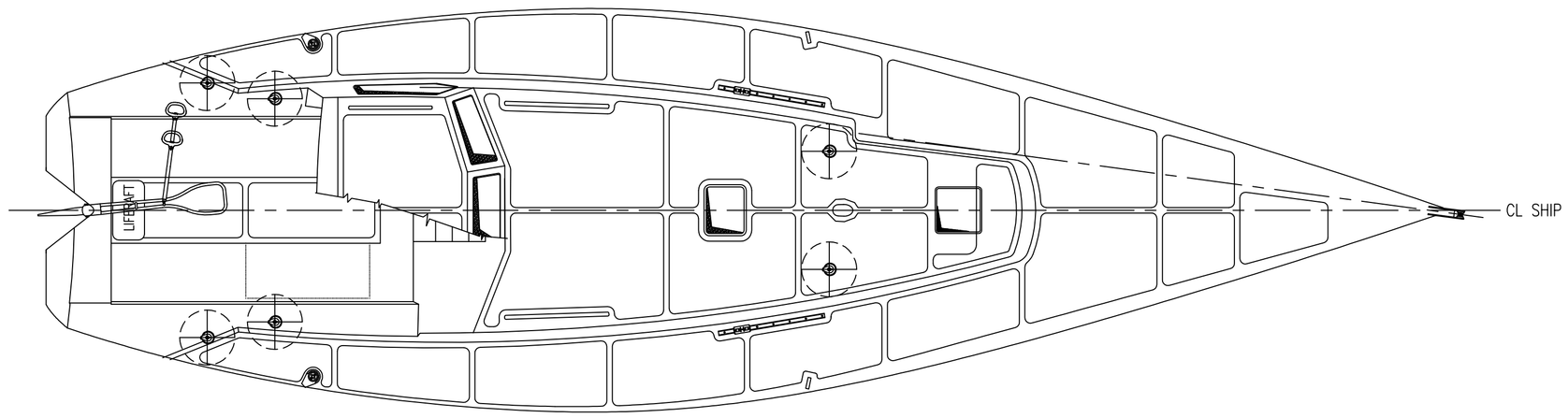

PLAN AT MAIN DECK

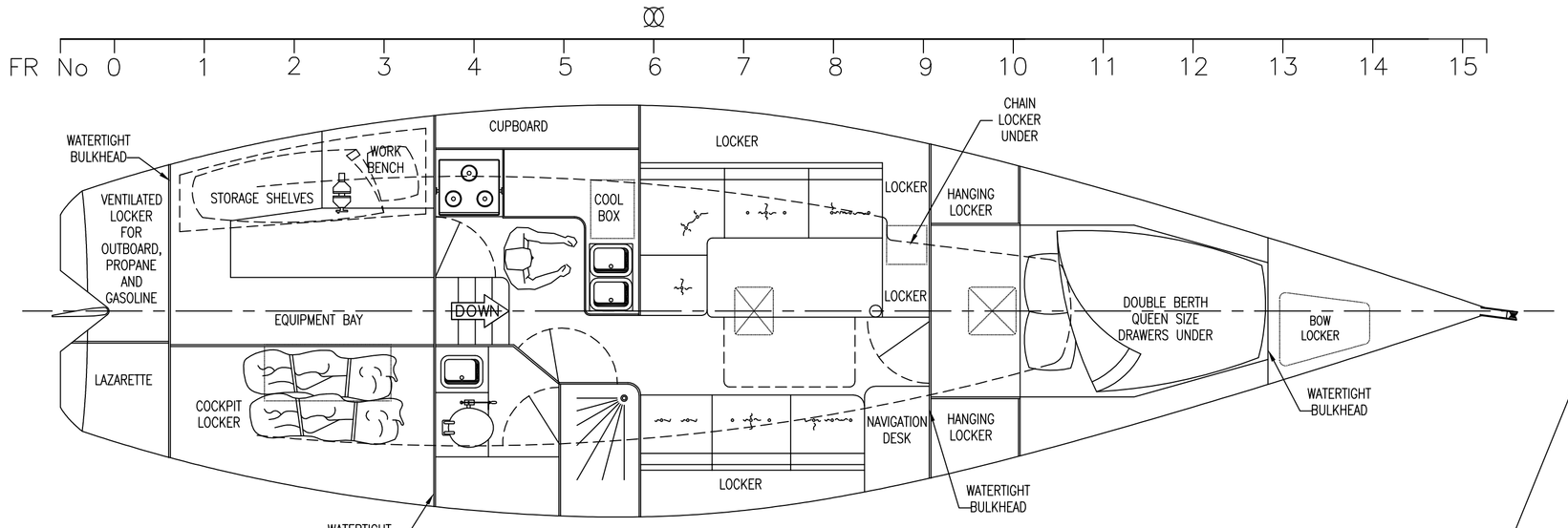

PLAN AT LOWER DECK

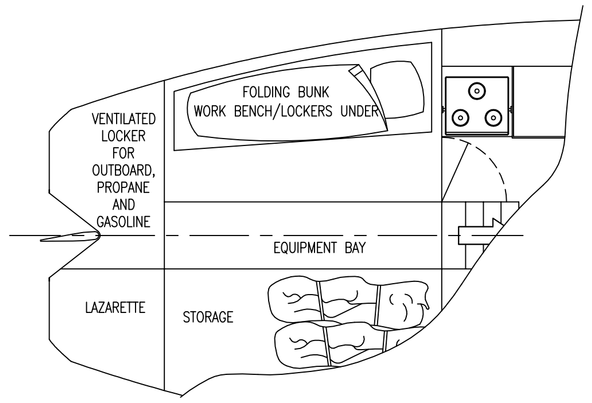

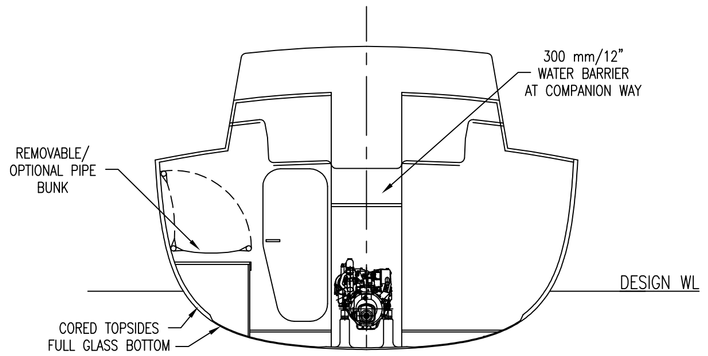

SECTION THROUGH FWD END OF COCKPIT

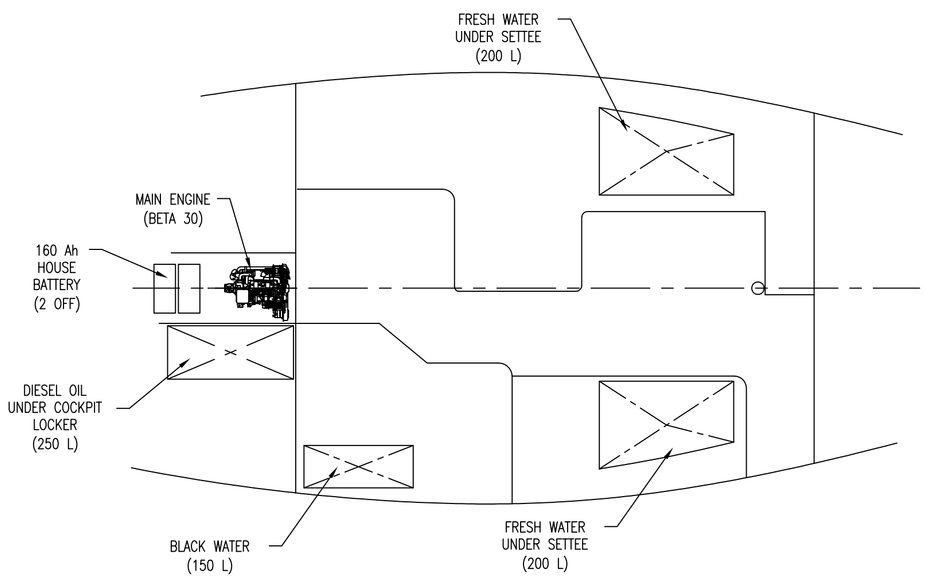

PLAN UNDER LOWER DECK

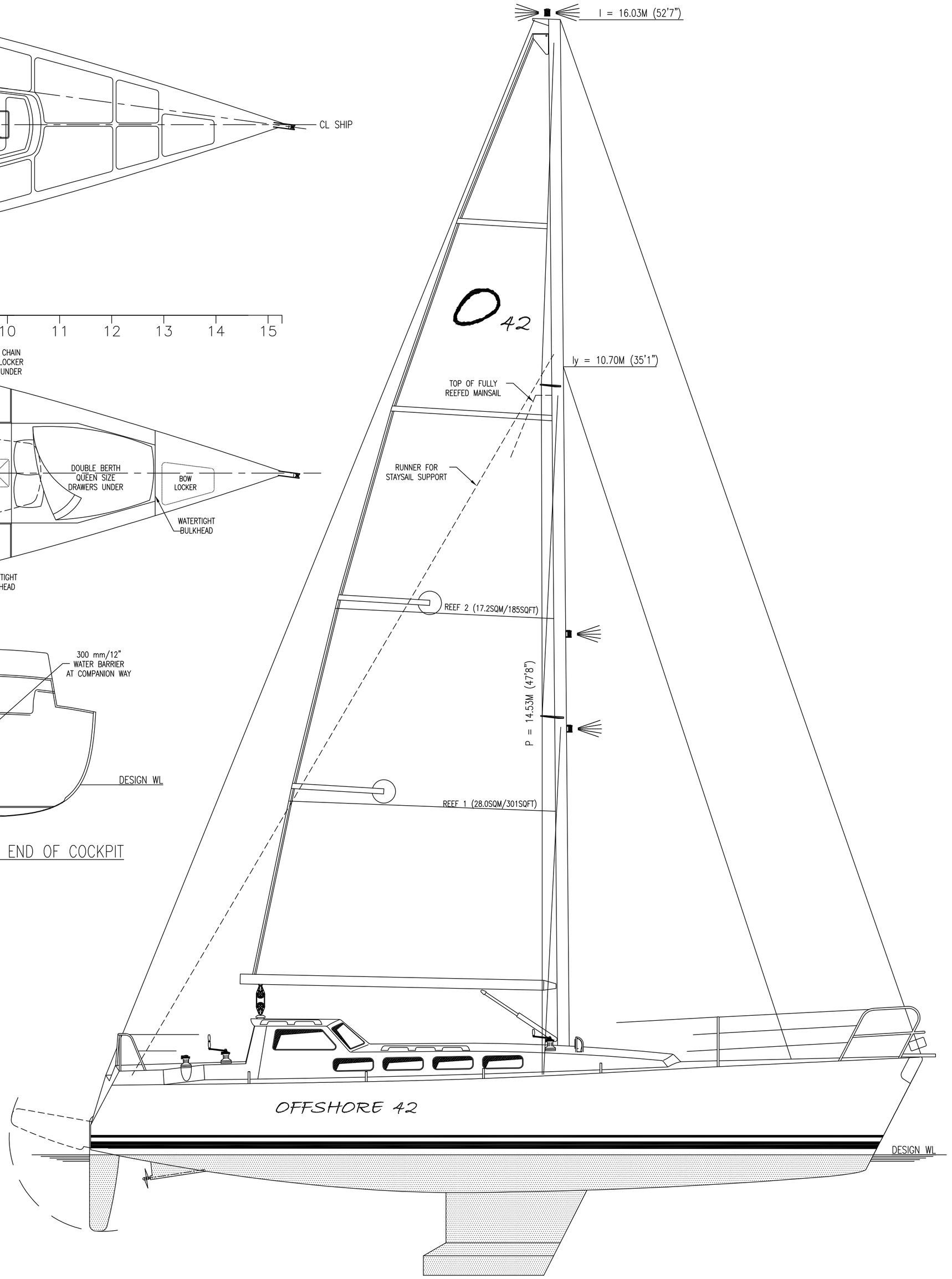

PROFILE

REFERENCE PLANS:

No.	Dwg No.	DESCRIPTION

GENERAL NOTES:

1. ALL DIMENSIONS ARE IN MILLIMETERS UNLESS NOTED OTHERWISE.

PARTICULARS

LENGTH OVERALL	13.76M	(45'1")
LENGTH HULL	12.72M	(41'9")
BEAM OVERALL	3.67M	(12'0")
DEPTH MOULDED AT	2.64M	(8'8")
DESIGN DRAFT	1.82M	(6'0")
COMPLEMENT		
VOYAGE CLASS	OFFSHORE, CAT. 0	
DISPLACEMENT	8.0MT	(17,600LBS)
PAYLOAD	2.0MT	(4,400LBS)
MAINSAIL	39.9SQM	(429.5SQFT)
105% HEADSAIL	42.9SQM	(461.8SQFT)
TOTAL UPWIND	82.8SQM	(923.5SQFT)
STAYSAIL	11.6SQM	(124.9SQFT)
CODE0	72.0SQM	(775.0SQFT)

Rev	Date	By	Remarks

THIS DRAWING, DESIGN CONCEPT, AND SPECIFICATIONS ARE THE PROPERTY OF *BAGHEERA-SAILING* AND SHALL NOT BE COPIED IN ANY MANNER, USED FOR MANUFACTURE, SOLD, TRANSFERRED, COMMUNICATED TO A THIRD PARTY, OR USED FOR ANY PURPOSE OTHER THAN THAT FOR WHICH IT IS SUPPLIED, WITHOUT THE EXPRESS WRITTEN CONSENT OF BAGHEERA-SAILING.

BAGHEERA -sailing

Client: -

Title: OFFSHORE 42
GENERAL ARRANGEMENT
OFFSHORE CRUISER

Drawn By:	Erik de Jong	Date:	08 Nov 2013
Checked By:		Scale: N.T.S.	Rev: 0
	Approval/Rev	DWG NO:	
Client		044-001	
Class			
Flag		Sht No:1 of 1	

A1 SHT METRIC