Item		
Color	black	red
Up	−	+
Down	+	−

Product parameter	
Item	Detail
voltage	12VDC
No−load speed	58mm/s±10%
stroke	250±3mm
Installation size	453±3mm
Load	200N
Front hole	ø8.2mm
Rear hole	ø8.2mm
wire	twin−core 18AWG
wire length	2000±10%mm
Connector	None
Limited switches	Built−in
POT	None
Protection grade	IP65

label

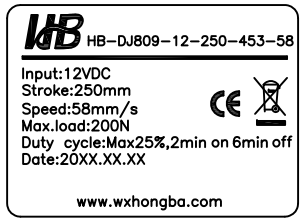

label

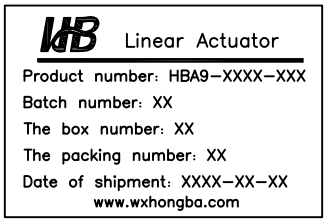

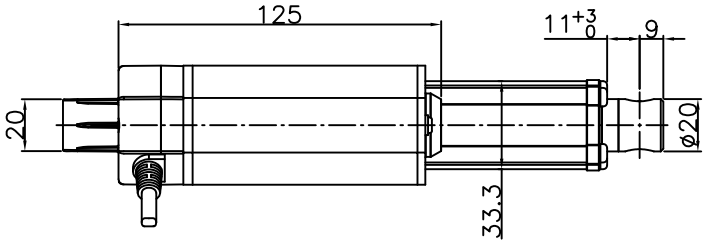

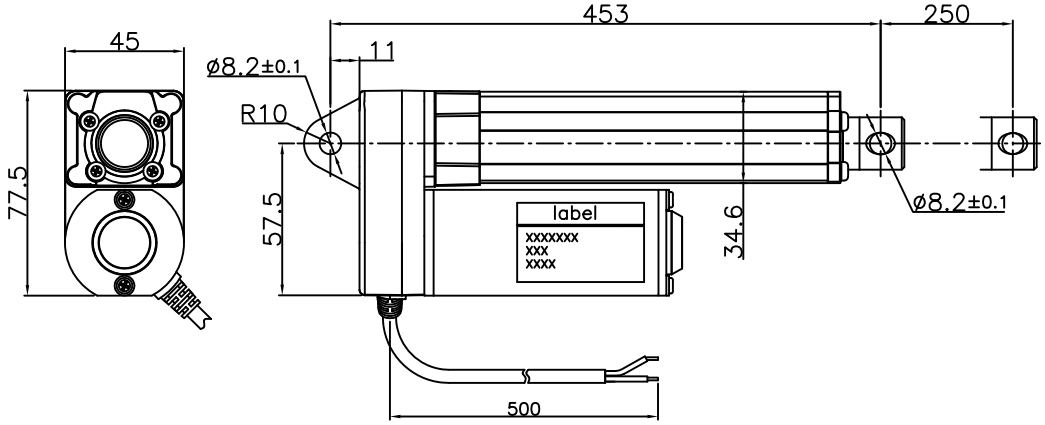

packaging

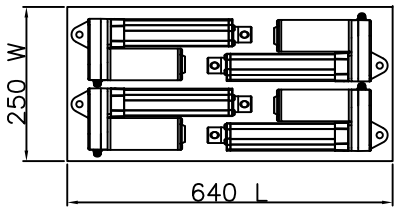

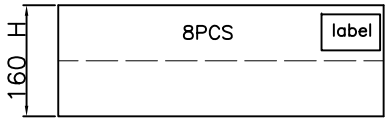

A	Sample Issue				GXJ	2019.06.20	
REV.	DESCRIPTION			ECN NO.	BY	DATE	APPD.	DATE
UNIT.	MM	SCALE	NONE	MATERIAL		NAME	Linear actuator 809
TOL.			SHEET 1/1	FINISH		PART NO.	YHBA9−19062003

WuXi HongBa Mechanical Electrical Equipment Co., Ltd