LATE MODELS WITH LARGE INSTRUMENT PANEL

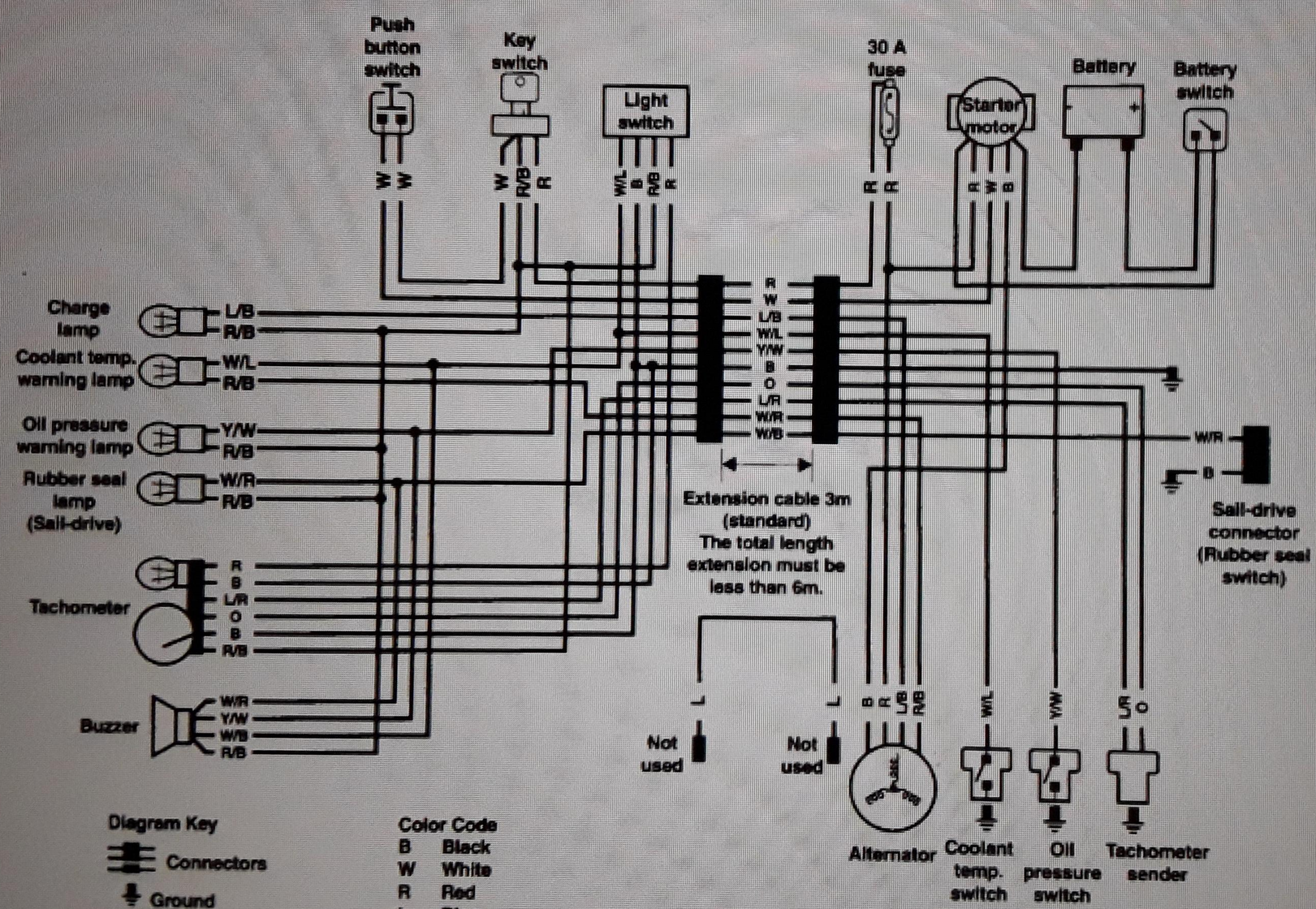

Diagram Key

- Connectors
- Ground
- Frame ground
- Connection
- No connection

Color Code

B	Black
W	White
R	Red
L	Blue
O	Orange
W/B	White/Black
W/R	White/Red
W/L	White/Blue
R/B	Red/Black
L/B	Blue/Black
L/R	Blue/Red
Y/W	Yellow/White